Analysis and Research of Microgrid System composition

Caixia Yang[1], Yi Su[2], Ranran Zhao[1], Han Chen[3]

[1]School of Electrical and Electronic Engineering, Wuhan Polytechinic University, Wuhan, Hubei, China

[2]Changjiang Engineering Survey, Planning, Design and Research Co. Ltd. Wuhan, Hubei, China

[3]School of Electrical Engineering, Beijing Jiaotong University, Beijing, China

Keywords: microgrid, microgrid structure, function subsystem, control system, distribution system, fast communication

Abstract: Microgrid has complicated structure, and needs lots of the functional units for dispatching power flexibly, but due to the microgrid is no detailed national standards and construction conditions, each microgrid project was different at type, structure, function and so on, which was difficult to reflect the completeness of microgrid. The paper relayed on China's first government led large-scale new energy application and smart microgrid demonstration project, discussed function subsystem in a complete microgrid from power generation and storage, distribution, electricity four links. At last, it analyzed a microgrid engineering case, provided technical support for microgrid construction.

1. Introduction

New energy industry is regarded as a new industry to grasp the pulse of the future. As a step to solve the chess game of new energy application, smart microgrid plays a key role in fully absorbing clean energy, promoting energy saving and emission reduction, optimizing energy allocation, improving power efficiency and promoting the development of low-carbon economy[1]. The combination of new energy and smart microgrid can not only realize the local use of electric power, reduce the line loss of long-distance transmission of power, but also promote the management of demand-side electricity, and combine with energy storage technology to realize the peak cutting and valley filling of electric power. Effectively solve the security, economic and efficiency problems in the use of new energy. Smart microgrids are recognized as the golden key to new energy applications.

The CERTS Association of the United States first put forward and studied microgrid, which is defined as: microgrid is a semi-automatic system composed of power supply and terminal, which can provide both electric energy and heat energy; The power devices of the power supply inside the micro-grid are take charge of energy transformation and provide necessary control[2]. The microgrid proposed by the association is mainly used as a supplement to the system grid. When the system fails, it can automatically disconnect from the system grid and form its own power supply system, which is supplied by the micro-power source in the micro-grid for internal load. Ensure the normal operation of the load in the micro-grid. When the system returns to normal, the microgrid reconnects with the system grid connection. It mainly emphasizes the supplementary function of microgrid to the system grid and improves the reliability of power supply.

The research of microgrid in Japan mainly emphasizes the diversity of energy supply, reduces pollution and meets the individualized power demand of users. Therefore, much attention has been paid to the research of energy storage system, and the independent power supply system, which is supplied by traditional power supply, has also been brought into the category of microgrid, which greatly broadens the research scope of microgrid[3].

The definition of microgrid in Europe emphasizes the technologies of flexibility, intelligence, and diversification of energy utilization[4]. The use of primary energy, the use of micro-power, divided into uncontrollable, partially controllable and fully controlled, and can be cold, heat, electricity triple supply, equipped with energy storage devices, using power electronic devices for

  DOI: 10.25236/eeems.2018.003

energy regulation. That is the current use of more European microgrid definition. Compared with the definition of stereotype, the design and application of microgrid in Europe is more flexible and has been initially formed and will be further refined.

According to the guidance of microgrid issued in 2015, the new definition of microgrid is based on local distribution network construction, wind, light, natural gas and other kinds of distributed energy resources, which are complementary to each other, and have a high new energy power access ratio. According to the need, the micro-grid can combined with intelligent energy to use intranet comprehensively, and this relatively independent energy can interact with public grid flexibility[5]. This definition refers to two points, the first one is based on distribution grid, the second one is the access of various distributed energy sources, so the micro-grid is the supplement to the system grid to mainly absorb the distributed energy.

Micro-grid is an integrated power system that integrates power generation, distribution, storage and power consumption. Although it has a smaller power range and capacity than the system grid, in order to realize 'successful grid connection, stable island network, quick isolation, smooth and seamless switch', it still needs the coordinated operation of multiple power supply systems in order to give full play to the technical advantages of microgrid. Each function subsystem of microgrid is introduced in detail in this paper.

2. Structure of micro-grid

The structure of micro-grid is divided into two types: one is 'flat' structure, the other is 'vertical' structure.

The 'flat' structure refines the control hierarchy of the micro-grid, with a single control center directly facing the 'one to many' organizational structure of all power and loads in the micro-grid. A large number of monitoring data and control instructions can only be exchanged among the control center , the power supply and the load, but there is no direct information exchange among these power sources and the load. The control center manages the energy flow within all micro-grids and the energy exchange between micro-grids and system grids.

The flat structure of micro-grid has the advantages of simple structure, less control equipment and clear information flow. However, once the only control center of the micro-grid fails, the whole micro-grid will be paralyzed, which is not conducive to providing high quality power for important loads. Therefore, this method is more suitable for small-scale micro-grid.

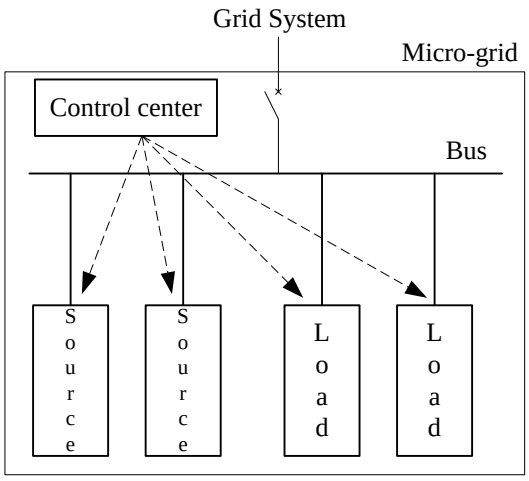

Fig.1 'flat' micro-grid structure

In the 'vertical' structure, there are several control centers in the microgrid. The micro-power supply and load are exchanged from the top-down sub-control center to the master control center to form a main micro-grid and several sub-micro-grids. The sub-micro-grid can also operate independently from the main micro-grid, and the flexibility is higher. The connection between power and load can be realized either by the main control center or by the corresponding

sub-control center.

The advantage of the vertical structure of micro-grid is that the security and the flexibility are higher. When the main control center fails, the larger micro-grid can break down into a smaller micro-grid with the core of the control center below, and the lower control center manages the respective micro-grid separately until the upper control center returns to normal. However, because there are many layers and equipment in the micro-grid, the signal management and the control of the energy flow in the micro-grid will be more complicated.

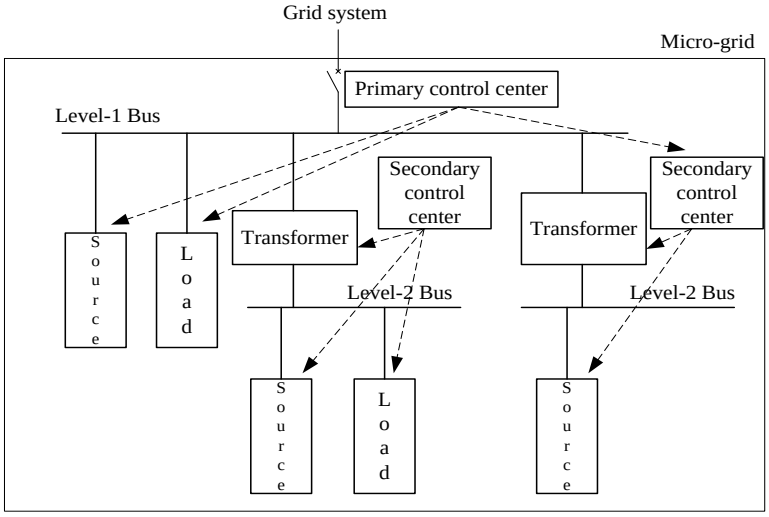

Fig.2 ‘vertical’ micro-grid structure

There are two construction modes in the design of microgrid. The first is to add the fast control and user intelligence management of microgrid to the traditional transformer and distribution system. The second is a new microgrid power line to connect the power supply and load.

In the first mode, the grid structure between power supply, transformer and load has been determined, so it is more suitable to use vertical structure for this kind of microgrid construction. At the node where the transformer is located, the sub-microgrid control center is set up to form a multi-level microgrid architecture, which can make full use of the established power lines and maintain the same power network structure.

In the second construction mode, the structure of microgrid can be flexibly selected according to the design needs. When the scale of microgrid is small and the distance between power supply and load is close, the flat structure is adopted. When the scale of microgrid is large, the vertical structure is better when the transformer is needed.

3. Microgrid function subsystem

3.1 Transformer and distribution subsystem

The substation and distribution subsystem includes electrical circuit, electrical equipment, lightning grounding protection, over voltage protection and so on. The system is built according to the planned microgrid architecture, which constitutes the basic framework of the microgrid, these function is similar to the traditional distribution network.

For large power loads such as industrial parks, it is usually necessary to configure medium voltage power lines as the main bus of microgrid to improve the power supply power and power supply range, and to set up a certain number of power transformers of both step-up and step-down ones to realize power conversion. In order to improve the balance between reliability and economy of power supply, hot reserve can be realized in the form of double bus-bar in low voltage bus-bar, and the possibility of power supply interruption can be further reduced.

The electrical structure of a microgrid is more flexible than that of a large grid. In addition to the form of AC busbar, it can also be used in the form of a mixture of AC busbar and DC busbar. The power sources such as micro-power sources, energy storage batteries, energy storage capacitors and

so on can be connected to the DC busbar. The electric energy is sent into the AC bus by a high power AC/DC converter for load.

3.2 Micro power system

In order to ensure long-term operation in off-grid mode, microgrid needs a certain number of micro-power sources to provide power. The micro power supply mainly uses wind, light, natural gas and other energy sources to provide power for the load in the form of small wind power system, photovoltaic shed, roof photovoltaic and a form combined cooling, heating and power. Connecting the new energy generation system to the microgrid can not only provide power for the load in the microgrid, but also make use of the management function of the micro-grid to coordinate the energy flow within the micro-grid, coordinate the power generation of the micro-power supply, smooth the wind power generation and photovoltaic generation and other fluctuated output curve,to provide high quality power for load.

The current power of wind turbines ranges from a few kW to a few MW. Large wind turbines require open installation and operation sites, high quality transport roads, large lifting tools, and limited wind resource conditions. Therefore, even if a wind turbine with rated power 2MW can provide the power supply needed by the microgrid, the wind power generation system in the microgrid is still dominated by dozens of small wind generators of kW level.

The rated power of the single photovoltaic module is about 300W, so the arrangement of the photovoltaic system is more flexible than that of the wind power system.Several photovoltaic modules can be linked respectively then connected to 400V AC bus , and a large number of photovoltaic modules can also be connected to 10kV main busbar . They can be connected to 10kV bus entirely, or to 10kV bus partially, then connected to 400V bus partially.

Because of photovoltaic module, inverter is very small, so in the city or industrial garden, photovoltaic power generation system can make full use of the space of roof and car shed, in rural or remote area, can make full use of the agricultural shed, the open space behind the house in front of house. Therefore, photovoltaic power generation is more widely used than wind power generation in microgrid.

The rated power of gas generation can be designed flexibly according to the demand of the project, and the output power is stable and easy to adjust. It is also one of the main power sources in microgrid. In order to make full use of natural gas resources, gas generator system is usually made into the form of triple supply of cold, heat and electricity to realize the comprehensive utilization of power supply, cooling and heating.

3.3 Energy storage system

Energy storage is an important means to improve the stability of smart grid access to renewable energy generation and a pivot and link to realize two way interaction of smart grid energy. On the one hand, the energy storage system is used to smooth the wind power generation, photovoltaic power generation and other power sources to reduce the impact of the intermittent and randomness of wind power generation and photovoltaic power generation on the micro-grid; Secondly, through the introduction of energy storage in the system, the demand side management is realized effectively, the peak and valley difference between day and night is eliminated, the load is smoothed, the power equipment is used more effectively, the power supply cost is reduced, and the application of renewable energy is promoted. It also contributed to improve the stability of the system, adjust frequency to compensate load fluctuation.

The storage of electric energy can be divided into physical, electromagnetic, electrochemical and latent heat energy storage according to specific forms. Physical energy storage includes pumped energy storage, compressed air energy storage and flywheel energy storage, electromagnetic energy storage includes superconducting, super capacitor and high density capacitance energy storage. Electrochemical energy storage includes battery energy storage such as lead acid, nickel hydrogen, nickel cadmium, lithium ion, sodium flow and liquid flow, and latent storage energy storage includes ice storage energy storage. The following table shows various electric energy storage technologies and their potential applications[6].

Table 1 Application of Energy Storage Technology in Power system

	Energy storage type	Rated power	Reaction time	efficiency
Mechanical energy storage	pumped storage	100~2000MW	4~10h	60~70
	CAES	100~300MW	6~20h	40~50
	Micro-CAES	10~50MW	1~40h	/
	fly wheel energy storage	5kW~5MW	15s~15min	70~80
Electromagnetic energy storage	SMES	10kW~20MW	ms~15min	80~95
	capacitor	1~100kW	1s~1min	70~80
	supercapacitor	/	/	/
electrochemical energy storage	lead-acid cell	1kW~50MW	1min~3h	60~70
	Advanced battery technology such as NaS, Li and so on	1kW~10MW	1min~many h	70~80
	liquid cell	10~100kW	1~20h	/

Lead acid batteries, lithium ion batteries, supercapacitors and liquid batteries are widely used in microgrid. The energy storage system can be used either as a large energy storage system to connect to the main bus or as several small scale separate access sub-microgrids. The battery is fully connected to the main bus line, the energy storage system and the microgrid have only one interface, which is easy to control and manage. However, when the sub-microgrid is operated separately assistance of the energy storage system. The quality of power supply in sub-microgrid will be affected. The distributed energy storage system can provide the energy storage function for the sub-microgrid, but because of the increase of the equipment, the control of the operation of the microgrid is increased. It is difficult and unfavorable to maximize the utilization rate of total energy storage system. Therefore, the energy storage system of microgrid is mostly in the form of mixed installation. Lithium batteries and lead acid batteries have very small monomer capacity, so they can flexibly adjust the access mode and capacity of the battery[7]. However, because of the large volume of liquid flow batteries, the electrolyte is more suitable to be connected to the main bus as the support of the main microgrid because of the way of increasing the capacity of the electrolyte. Supercapacitors charge and discharge fast, but the price is expensive, which is more suitable to provide short-time voltage support for important loads.

3.4 Intelligent control system

Microgrid intelligent control system is the core system of microgrid and the center of normal operation of microgrid. When connected to the grid, the intelligent control system should make full use of the power provided by the generation system in the microgrid, detect the fault quickly and break the crack with the large power network when something breaking down, and control the bus voltage and the internal power balance of the microgrid during the operation of the fixed network.

The intelligent control system mainly includes the fast detection system, the fast switch system, the energy management system and the corresponding protection relays system.Because microgrid and large grid can exchange energy in both directions, the fast detection system needs to distinguish inner network fault from outer network fault quickly and accurately, and quickly drive the corresponding fast switch action to remove fault source,or transfer the load to the backup power supply.

Compared with the traditional control and protection system, the intelligent control system of microgrid has the advantages of follows:

1) the microgrid in vertical mode has a main control center and several sub-control centers, and the microgrid managed by each sub-control center can also operate independently from the main microgrid; 2) the microgrid needs to provide higher quality power to the load, and the speed of power switching must be as fast as possible in case of failure, so it is necessary to use circuit switches faster than circuit breakers, such as configuring power electronic switches for important loads; 3) Because the micro-grid contains DC circuit, it has functions of the monitoring of DC

signal and the control of DC circuit breaker which are not available in the traditional grid. 4) the inertia moment in microgrid is very small, and the power electronic equipment such as fan converter, photo-voltaic inverter, energy storage converter and so on are designed with some short-circuit limitation. Therefore, the short-circuit current in microgrid is difficult to trigger the operation of traditional circuit breaker when the fault is short circuit, so it is necessary to combine the data of the fast detection system with the control system to accurately judge the fault and drive the special fast switch action.

3.5 Intelligent distribution system

One of the characteristics of microgrid is that it can not only manage the generation side, but also manage the power side at the same time, so as to realize the coordination and optimization control of distributed, intermittent power supply, energy storage and load. The intelligent distribution system has the function of managing the user side power, the core of which lies in the user demand side management system[8].

Intelligent distribution system mainly includes intelligent meter, intelligent switch and other equipment. Combining with the demand of users, the intelligent distribution system manages the power load scientifically and realizes the maximum utilization of green energy under the condition of ensuring the balance of power supply and demand.

The main functions of the intelligent distribution system are as follows: 1) when the load demand is greater than the power supply capacity, the unimportant load is removed, and when the power supply capacity is greater than the load demand, the energy storage system is used to store the excess electric energy; 2) collecting electricity data based on intelligent ammeter, providing peak and valley electricity price to customers in time through intelligent meter, intelligently guiding users to change part of load to running when electricity is low; 3) assisting customers to change energy supply system flexibly. For example, by adjusting the price of green energy to guide customers to use green energy to generate electricity more when the electricity price of power grid is higher, it can reduce the total cost of electricity consumption and not change the production of users' habit.

In the industrial park microgrid system, the intelligent distribution system can be used in the operation and management of air conditioning and large mechanical equipment. In the air conditioning management, the intelligent distribution system detects the indoor temperature according to a large number of temperature sensors arranged and adjusts the wind direction of the air outlet. The set temperature of different air conditioners is that the indoor temperature is kept in an appropriate range. At the same time, it avoids the situation that air conditioning users set air conditioning temperature below 26℃ for a long time, and responds to the national notification spirit. For large mechanical equipment, flexible pricing strategies are used to encourage users to reuse their equipment at low load levels.

3.6 Rapid communication system

The microgrid contains a large number of equipments for generating, distributing, storing and using electricity. The data of monitoring signal and action signal is very large, and the real-time requirement of these information is very high, so the high requirement for network communication is put forward. Because the control and collection of data in the power network requires the transmission of error-free data in a very short period of time, such as the unstable quality of the network, the occurrence of jitter, the high delay, the failure of the data transmission to be delivered within the specified time, or the mistransmission of the data by the network. It is possible to cause equipment maloperation, control failure, grid-connected/disconnected fault and other serious accidents.

The environment of microgrid communication equipment is very complex, not only has the test of temperature and humidity, but also has the very strong electromagnetic interference environment, which requires that the communication equipment must also have super anti-electromagnetic interference ability to ensure the availability of communication channel.

The production wired communication network based on high-end industrial Ethernet equipment can provide 100% of available communication channels to the maximum extent. It has a service life

of more than 50 years and can still guarantee the ‘zero packet loss’ of data communication in extremely bad environment. Compared with the networking mode such as communication cable, fiber optic network can provide more bandwidth and stronger anti-interference, so micro-grid is more suitable for building the main communication network with optical fiber communication.

Because there are more data in microgrid, the separation of production data from office data (both wired and wireless have independent production network and office network) is helpful to enhance network security and enhance the ability of network defense against external attacks. The single production network operates as an ‘internal private network’, and special management eliminates the attacks, viruses, information leaks and other network security events that often occur in the office network.

4. Case Analysis of Microgrid

As the first large-scale new energy application and smart microgrid demonstration project led by the government in Beijing, a certain microgrid in Beijing takes the office building in the industrial garden as the object to build the smart microgrid to provide production power for the office building. And guide customers to prioritize the use of wind, light clean power.

The park has 24 office buildings and a complex with 1.68MW of photovoltaic power, 60kW of wind power and 3.7MWhs of energy storage systems. The new energy and energy storage system is centralized combined with decentralized setting to meet all the demands of the park in the near future, and it can properly supply electricity to the city network, and realize green power supply and zero carbon emission in the initial stage of the project.

The microgrid adopts vertical structure and is divided into three levels. A primary control center is set up at the 10kV bus connected with a large power grid as the main control center, a secondary control center is set up in three step-down power distribution rooms and a third level control center is set up in 25 buildings. Each part of the microgrid managed by the control center can be operated independently, either in the form of a park microgrid or in the form of 25 independent microgrids. The structure of the whole microgrid is quite flexible. In order to improve the reliability of power supply, the double bus structure is adopted to realize the hot standby of the power supply in the microgrid, and the ATS automatic switch is used to realize the self-supply of the power supply bus. Dynamic switching.

Correspondingly, there are three levels of microgrid management system in the microgrid. The first level control center is the main control center. The lower level control center collects all data and signals from the higher level control center, and receives the dispatching orders from the higher level control center.

Power generation systems and energy storage systems are arranged in the form of centralized and decentralized combination. The power of wind turbine in this micro-grid is small and the power of single generator is only 20kW, so it only connects to one of the two-stage microgrid by 400V busbar. Photovoltaic installed capacity is large, divided into three parts: 1.63MW roof photovoltaic module through three groups of nearby access to 10kV bus, mainly for the entire micro-grid power supply; The photovoltaic shed of 18kW is connected to the two-level microgrid through the 400kV bus, and the 32kW photovoltaic module is scattered on the top of the switchgear box outside each building and connected to the three-level microgrid. In the configuration of the energy storage battery, 10 The liquid flow cells connected to 300kW×4h on the kV bus provide storage and discharge functions for the whole microgrid. The 400V busbar of each two-stage microgrid is equipped with two sets of 100kW×0.5h lithium battery pack, and the three-stage control center of each building is equipped with 50kW×0.5h lithium battery pack. In this way, any microgrid can generate electricity when it is running alone, and the storage device can provide short-term power for the microgrid and give the user sufficient response time.

The smart distribution system of the microgrid is equipped with the power demand side management system to manage the split air conditioning of each building, and the operation time of each air conditioner is controlled by the intelligent socket, and the personnel are restricted to adjust the air conditioning start and stop state and the set temperature at will. In addition, for large

machine tools such as user equipment, through intelligent ammeter analysis of their electricity demand, according to the control center to provide time-sharing electricity to help users adjust the operating time of the load.

Because there are quite a lot of generating equipment, storage equipment, electric equipment, intelligent street lamp and video surveillance system in the microgrid, the amount of signal data is very large, in order to ensure the stability and real time of signal transmission, The communication loop between the primary control center and the third level control center is all optical fiber communication, and only the communication within each office building below the three-level microgrid can be communicated by cable. In order to reduce interference, the microgrid communication network and office network in each building are not shared.

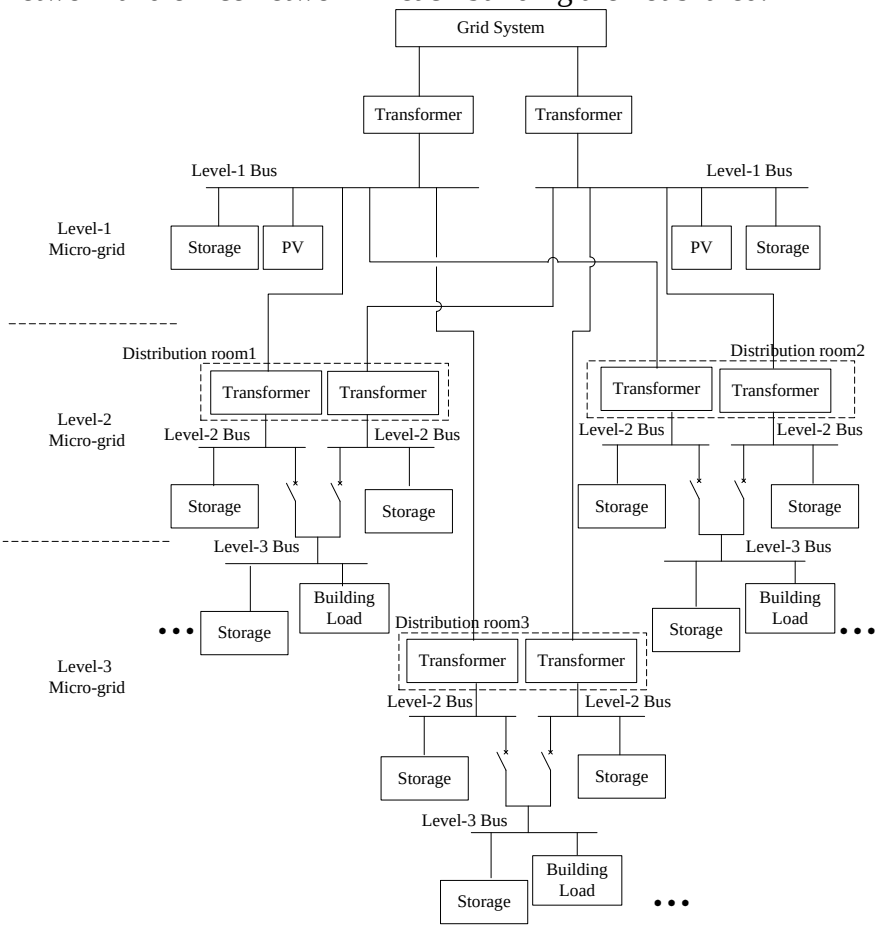

Fig.3 main structure diagram of microgrid

Fig.4 Panoramic view of microgrid plant area

Fig.5 Photovoltaic sheds and AC, DC charging piles

Through the coordinated operation of many systems, the park has constructed a ‘multi-level microgrid, which can be used in a single, plug and play’ smart microgrid, which provides green power for the park by using wind and light power generation system. Using dual redundant power supply line and centralized combined distributed energy storage system to provide high reliability power, multistage control system combined with ATS automatic switching switch is used to realize fast fault isolation and microgrid reconfiguration. Using intelligent distribution system to realize power saving and sub-peak power consumption is the purpose of using optical fiber network to realize the rapid communication within the micro-grid.

The construction and implementation of smart microgrid with the above characteristics will make the industrial park form a comprehensive research and demonstration base of smart grid with "green power generation" and "intelligent electricity consumption" as the core, which fully embodies the coordination of various optimization objectives. The great changes brought about by modern information technology, new material technology, energy storage technology and new power grid structure are fully demonstrated.

5. Summary

Microgrid is a new network structure, it is a group of micro power supply, load, energy storage system and control device. Microgrid is an autonomous system which can realize self-control, protection and management.

A relatively complete microgrid should have the main functions of generating, storing, distributing and using electricity. In order to achieve the supply-side management of the energy storage system, it is necessary to configure the corresponding power supply in the structure of the traditional transformer and distribution system. The distribution system is used to realize the user side management, the intelligent control system is used to realize the overall management of the microgrid, and the communication system is used to ensure the accuracy and reliability of the communication system. Only through the coordinated operation of each functional subsystem can the micro grid realize the intelligence and high efficiency of power consumption.

Microgrid can accommodate the access of new energy power generation on a large scale, use microgrid to construct intelligent electricity environment, realize zero carbon and even negative carbon emission, declare to the world that our country is determined to ‘develop clean energy, save energy and reduce emissions, shoulder international obligation’. Great social benefits have been achieved.

References

[1] Wang Chengshan, Wu Zhen, Li Peng. Research on key technologies of micro grid [J]. Journal of Electrical Technology, 2014, (02): 1-12.

[2] Chen Yongshu, Zhou Luowei, du Xiong. Overview of microgrid control[J]. China Electric Power, 2009N42 (07): 31-35.

[3] Li Lihua, Li Binai. Research and application prospect of microgrid technology[J]. Power and Energy, 2011N33 (02): 124-126.

[4] Bao Wei, Hu Xuehao, he Guoqing, et al.Research on the standard of grid connection of distributed generation [J]. Power Grid Technology, 2012N36 (11): 46-522.

[5] editorial Department of this Journal. The State Energy Administration issued guidance on promoting the Construction of New Energy Microgrid demonstration Project[J]. Rural electrification, 2015, (09): 1.

[6] Lai Xiaokang, Zhang Wenliang, Qiu Ming. Application of energy storage technology in electric power system[J]. Power system Technology, 2008N32 (07): 1-9.

[7] Liu Sheng-yong, Zhang Xing.Summary of energy storage batteries in new energy distributed generation system [J]. Power supply Technology, 2012, 36(04): 601-605.

[8] Chen Zheng, Wang Lihua, Zeng Ming, et al.DSM of Power supply side under the background of domestic and Foreign Sale side Reform[J]. Power demand side management, 2016,(03):62-64.